ZUMI

Great Services, Great Design, Great Product

Novus Wall Hung Intelligent Toilet With Concealed Cistern and Colors of Flush Plates

V7201SGM

Data Sheet

Model :	V7201
Dimension :	606*398*69mm
Rated power :	1080W-1130W
Voltage :	220V- 240V, 50/60Hz
Finish :	White
Flush volume :	Full flush 6L/Reduce flush 4L
Trap type :	P-trap (With concealed cistern)
Water pressure range :	0.08 - 0.8MPa
Control :	Manual buttons + Remote control
Heating type :	Instant heating
Wels Registration No :	L06911
Warranty :	First 12 month Onsite Support, 5 Years Free Replacement On the Bidet Seat and Parts, 15 Years Warranty On Ceramic , 15 years free repalcement conceal cistern parts
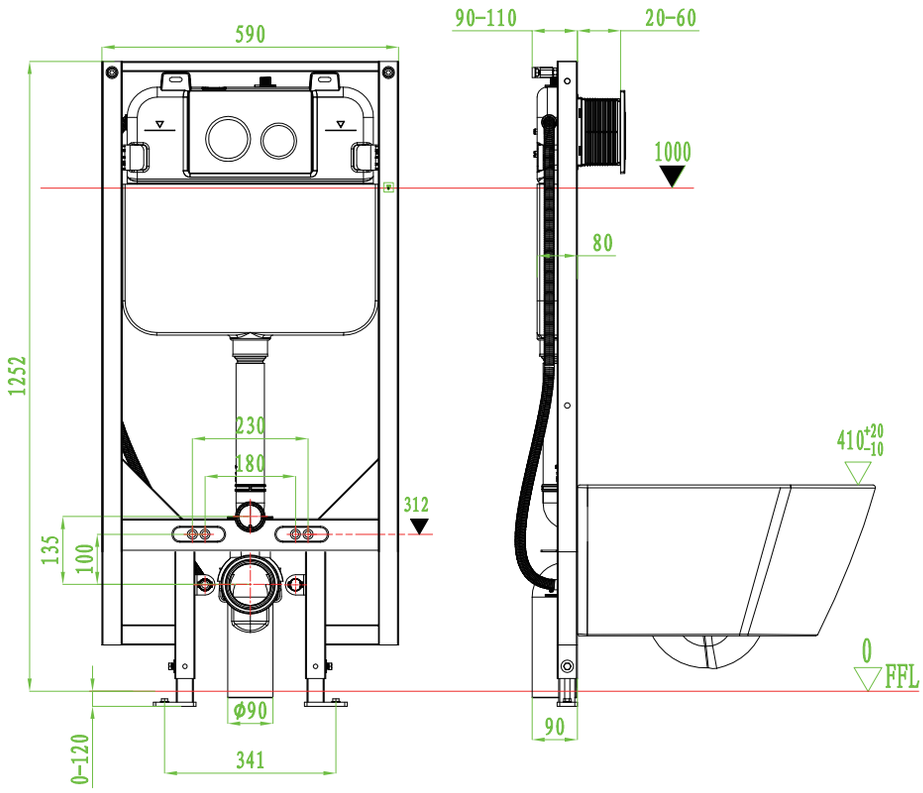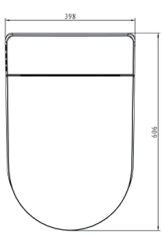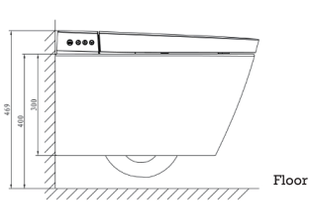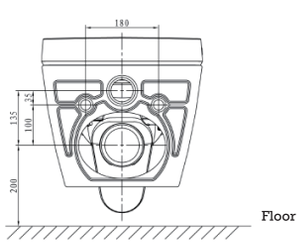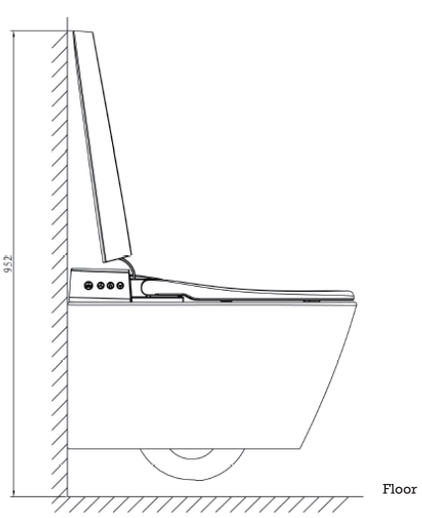
Product Specifications