Castano
Bathroom and Kitchen Collection

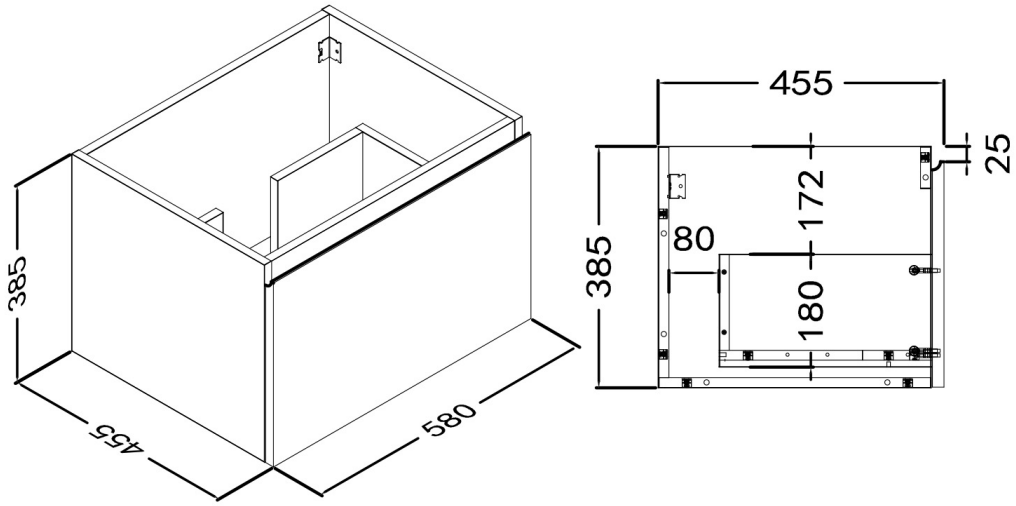

Code MES60WH / MES60WHOAK

600 Mesina Wall Hung Vanity

- 580w x 455d x 385h
- Soft close fingerpull drawers
- Available in Gloss White & Oak Timbertone
- All models are center waste
- 5 year warranty
- See corresponding top for waste required
- 3 Tap Hole Available

t | 1300 856 887 f | 07 3806 4236 e | sales@castano.net.au www.castano.net.au