EMILIA

FLUSH TO WALL RIMLESS TOILET SUITE

JohnsonSuisse
Bathroom Solutions

CODE:
JTTE405.JTTE406

FEATURES

- SMARTLY STYLED FLUSH TO WALL VITREOUS CHINA TOILET SUITE
- EFFICIENT RIMLESS DESIGN FOR HYGIENIC FLUSHING
- CISTERN WITH CONCEALED BACK ENTRY OR BOTTOM ENTRY WATER INLET
- SOFT-CLOSE, QUICK-RELEASE TOILET SEAT -TWO STYLES AVAILABLE
- S OR P TRAP CONFIGURATION INSTALLATION
- ADJUSTABLE S TRAP PAN CONNECTOR

COMPONENTS

EMILIA RIMLESS FLUSH TO WALL PAN		JTTE405
EMILIA CISTERN		JTTE406
EMILIA SLIM PP TOILET SEAT	OR	JSEE110
EMILIA UREA TOILET SEAT		JSEE105

WARRANTY

10 YEARS - REFER TO T&CS AT johnsonsuisse.com.au

The more stars the more water efficient
WATER RATING
www.waterrating.gov.au
3.5 litres average flush
4.5 L per full flush / 3 L per half flush
In accordance with AS/NZS 6400
Licence No. 0137
Bathroom Products Australia P/L

WaterMark
LIC.WMK74833
AS1172
ApprovalMark

EMILIA FLUSH TO WALL TOILET SUITE
DIMENSIONS

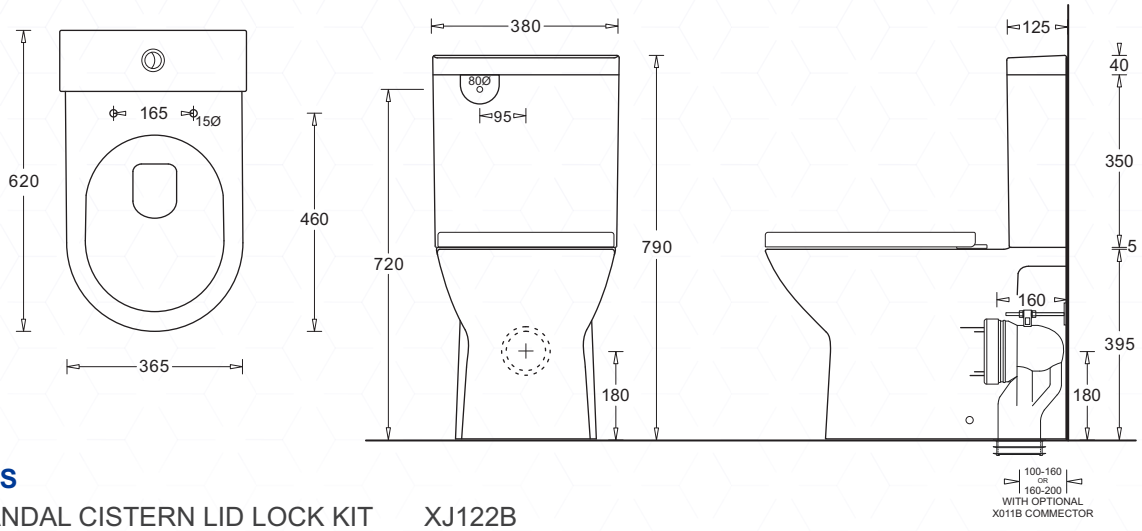

OPTIONS

ANTI-VANDAL CISTERN LID LOCK KIT XJ122B

All dimensions are in millimetres and are subject to normal manufacturing variation.
As product development is ongoing BPA reserves the right to vary specifications without notice.
Bathroom Products Australia P/L ABN 87 079 297 617

JohnsonSuisse
Bathroom Solutions
2/97 Banksia St., Botany, NSW 2019
TEL: 1300 717 717 FAX: 1300 746 480
www.johnsonsuisse.com.au

V2 1020