SHOWER SET

SPECIFICATION

PRODUCT CODE	YSW2807-05C
WELS RATING	3 STAR 8.5L/MIN
WATERMARK LICENSE	WM-060093
TEMPERATURE RATING	MIN 1℃-MAX 75℃
PRESSURE RATING	MIN 150KPa-MAX 500KPa

FINISH

NR280705cCH chrome

MAINTENANCE AND CARE

All surfaces should be cleaned with mild liquid detergent or soap and water.

Do not use cream cleaners or citrus based cleaning products, as they are abrasive.

Use of unsuitable cleaning agents may damage the surface.Any damage caused in this way will not be covered by warranty

PACKAGING INCLUDES

- 1x shower arm
- 1x shower rail
- 1x diverter
- 1x thread adapater
- 1x shower head
- 1x handle shower
- 1x handle shower holder
- 1x shower hose
- 1x bracket
- 1x installation kit

Dimensions are nominal measurements only.

10 YEARS WARRANTY 10

WaterMark AS/NZS 3662 WM-060093

WATER RATING 8.5 litres per minute

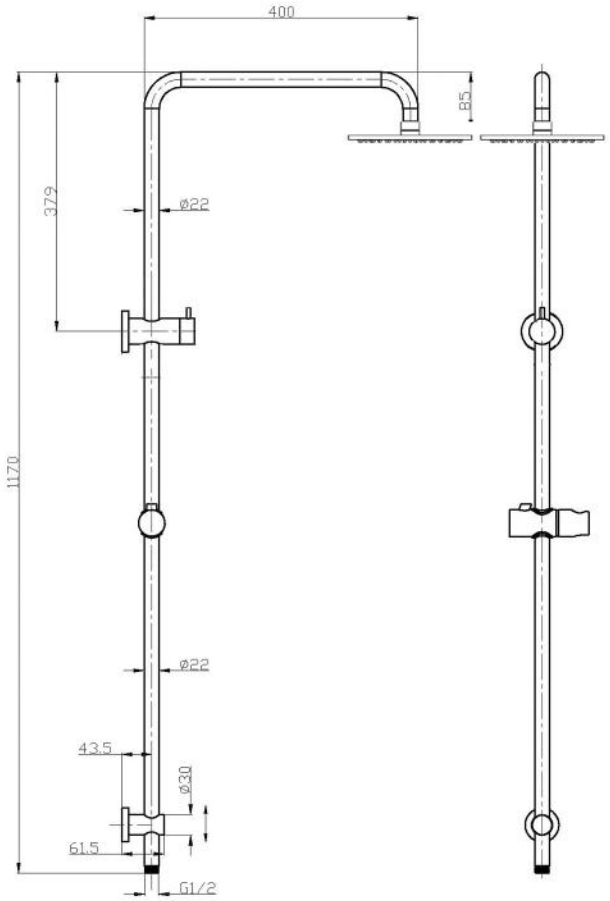

Diverter Operation

1

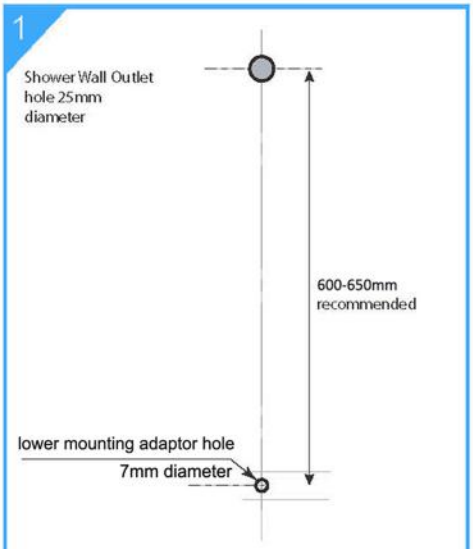

2

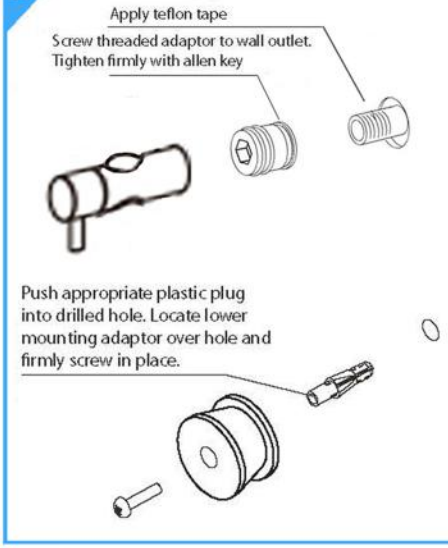

3

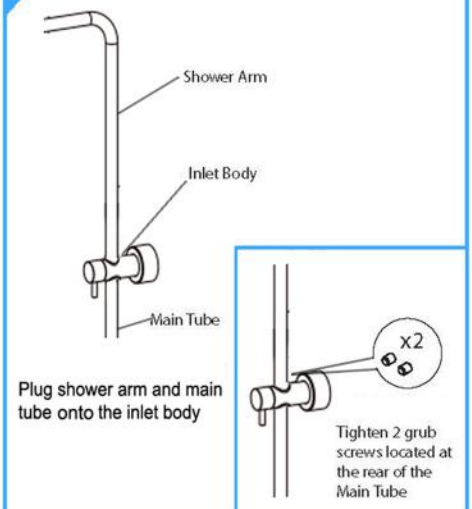

4

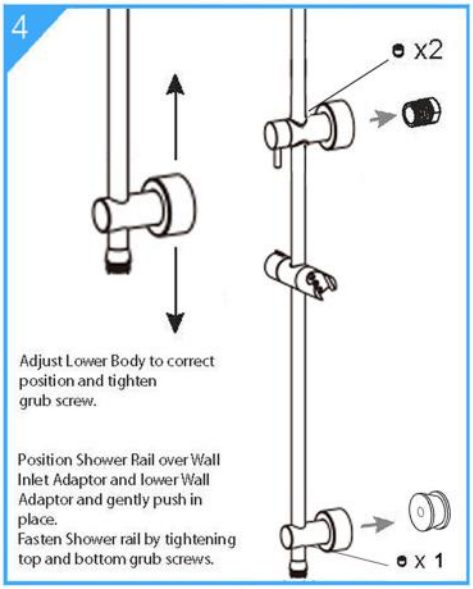

5

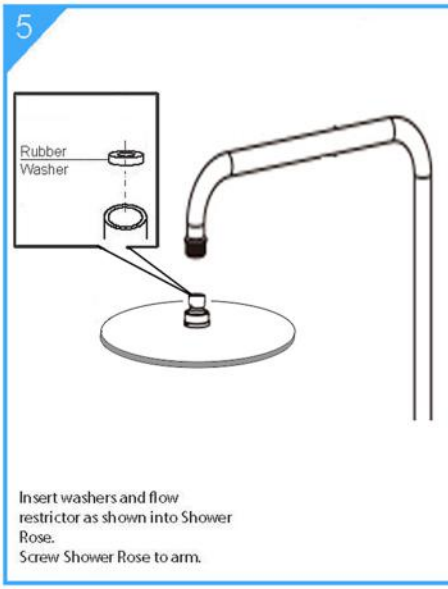
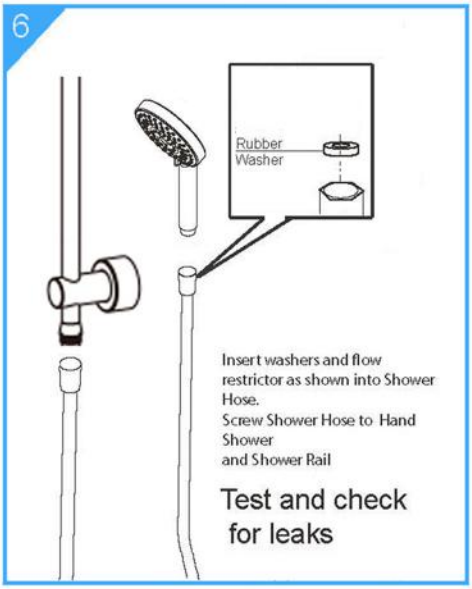
6