EVERHARD

SPEC PACK

PRODUCT INFO | IMAGES | DRAWINGS

A family owned Australian business

ESTABLISHED 1926

PRODUCT

EI Trade Plastic Cistern & Seat & Exposed S Trap Pan

EI CODE

75506

BRAND

EI Trade

SPEC PACK

EI TRADE COLLECTION

SPEC SHEET

EI TRADE PLASTIC CISTERN & SEAT & EXPOSED S TRAP PAN

PRODUCT CODE:
75506

FEATURES:

- Quality guaranteed polypropylene cistern
- 420mm width to cover old cistern holes
- 1.2kg polypropylene seat with quick release detach feature for cleaning and maintenance
- Soft close toilet seat
- WELS: 4 star rated 4.5/3L (3.4L avg/flush)
- Flush capability: Convertible to 6/3L
- 130-240mm set out range for pan

OVERALL DIMENSIONS:
680 W x 833mm H

WARRANTY:
5 years cistern & pan
1 year seat & valve

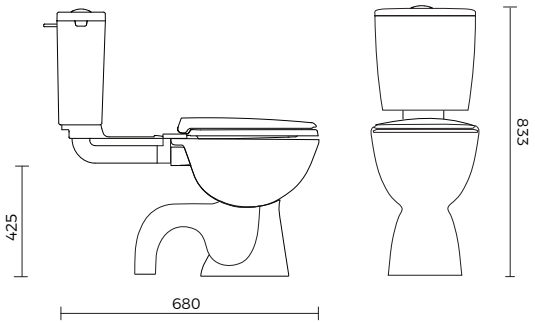

Disclaimer: All measurement are in millimetres and are solely for reference purposes. Colours have been reproduced with as much accuracy as possible. Any changes resulting from technical advance of design or colour may be made without prior notice. Tapware, accessories and appliances are for illustration purposes only. Further information on warranties is available at www.everhard.com.au

SPEC PACK

EI TRADE COLLECTION
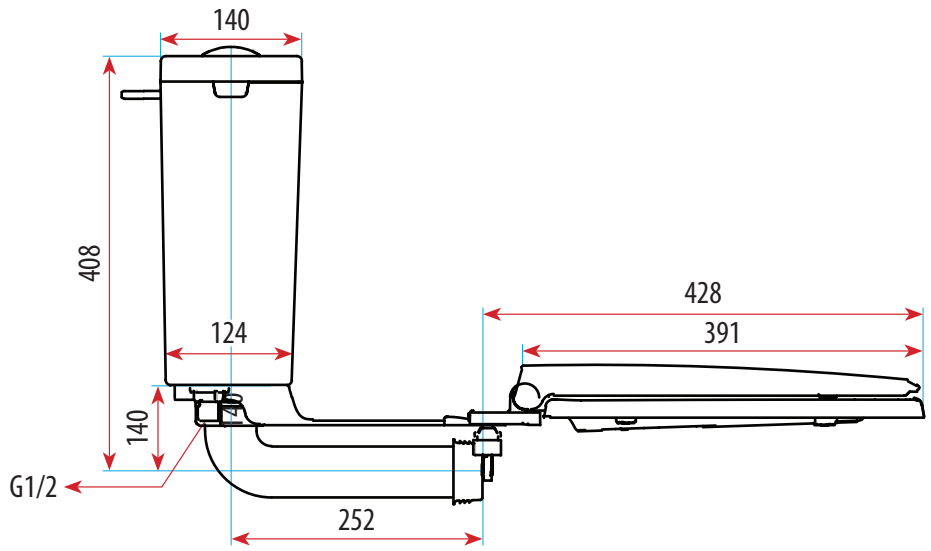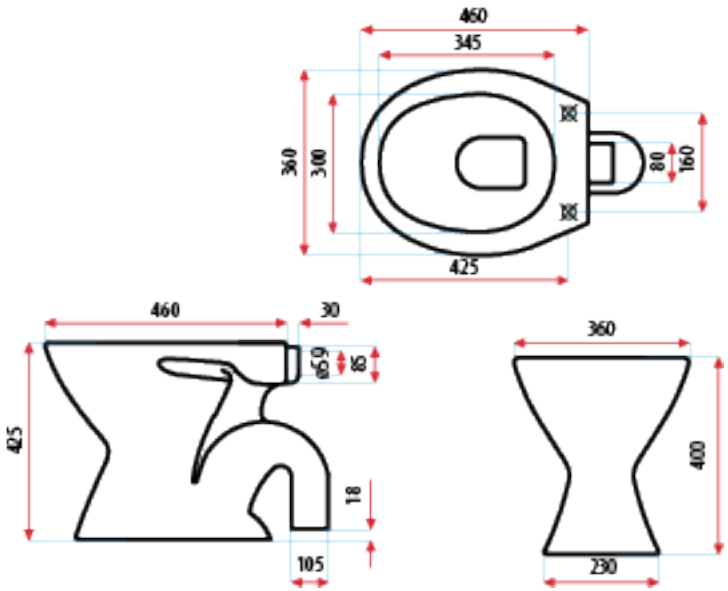
PRODUCT DRAWING