Kaya®
SINK MIXER

Features

- Gooseneck outlet
- Swivel function
- Made from solid brass
- High quality European cartridge (25mm)
- PEX split-resistant flexible hoses
- **WELS 6 Star rated, 4.5L/min**

Please note: This product may have a visible Fienza or Watermark logo.

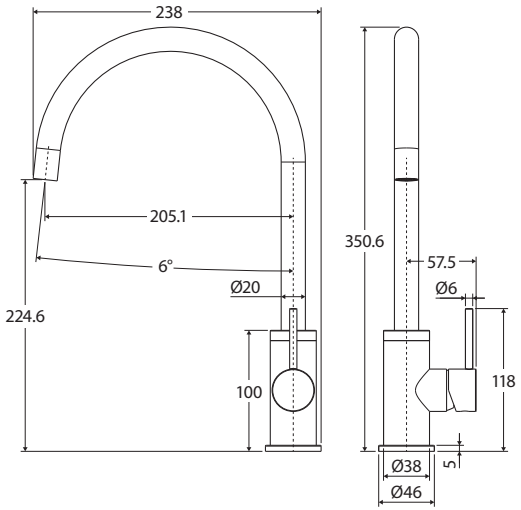

Available in

Warm White Gloss	Blossom Matte	Autumn Matte
228105W	228105BL	228105A

Cleaning & Care

- Regularly clean with mild soapy water using a microfibre cloth.
- In highly polluted or coastal locations, we recommend cleaning 2-3 times per week.
- Do not use harsh detergents, bleach, cream cleaners or citrus based cleaners. These substances are abrasive and will damage the surface.
- Do not use undue pressure and wipe in one direction only.

WaterMark

WATER RATING
www.waterrating.gov.au
4.5 litres per minute
In accordance with AS/NZS 6400
Licence No. 0252
Fienza

While we aim to ensure specifications are correct at the time of publication, Fienza reserves the right to make modifications without prior notice. Physical colour may vary from image shown.
All measurements are shown in millimetres. Always use physical product measurements for mark-ups and roughing-in as the technical drawing may differ from actual product received.