VIVID SLIMLINE OVAL

VIVID SLIMLINE OVAL FLOOR MOUNTED BATH MIXER

SPECIFICATIONS

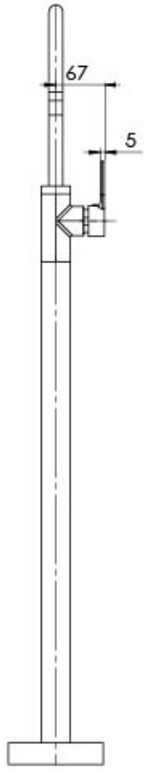

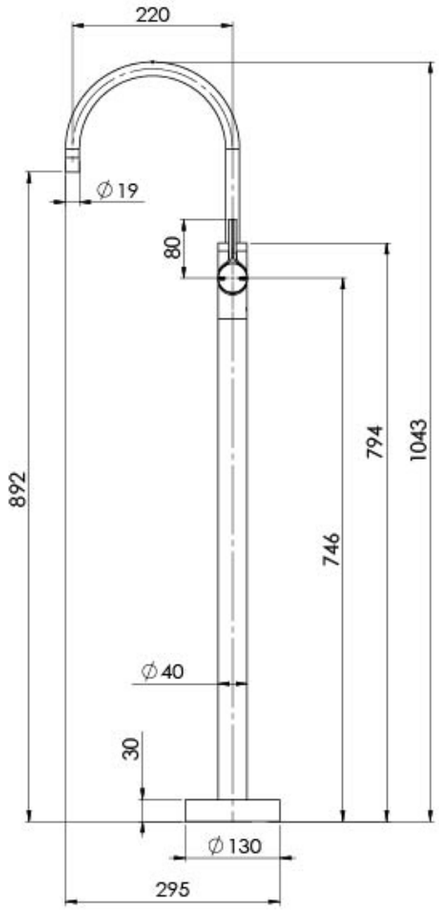

AVAILABLE IN

VV745-00	VV745-40	VV745-10	VV745-12
Chrome	Brushed Nickel	Matte Black	Brushed Gold

INFORMATION

Temperature Rating
1 - 75°C

Pressure Rating
150 - 500kPa

MAINTENANCE AND CARE:

- All surfaces should be cleaned with mild liquid detergent or soap and water.
- Do not use cream cleaners or citrus based cleaning products, as they are abrasive.
- Use of unsuitable cleaning agents may damage the surface.
- Any damage caused in this way will not be covered by warranty.

Please visit https://www.phoenixtapware.com.au/warranty to view the full warranty

PHOENIX

While we aim to ensure the specifications shown are correct at time of printing, Phoenix Tapware reserves the right to make modifications without prior notice. Always use the physical product measurements for mark-ups and roughing-in as the line drawing shown may differ from the actual product over time. All measurements are shown in millimetres. Colours may vary from image shown.

Ph: +61 3 9780 4200
09/03/2022
phoenixtapware.com.au